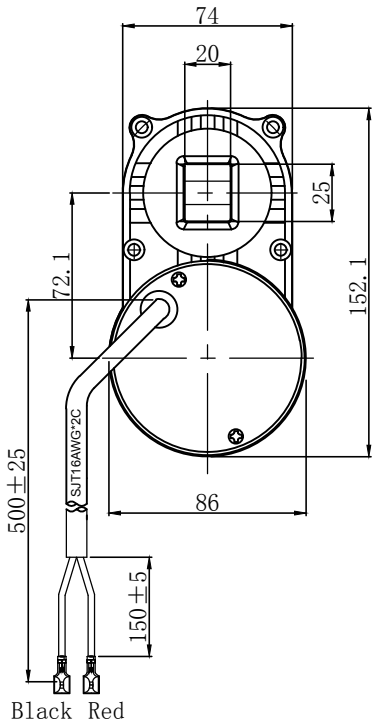

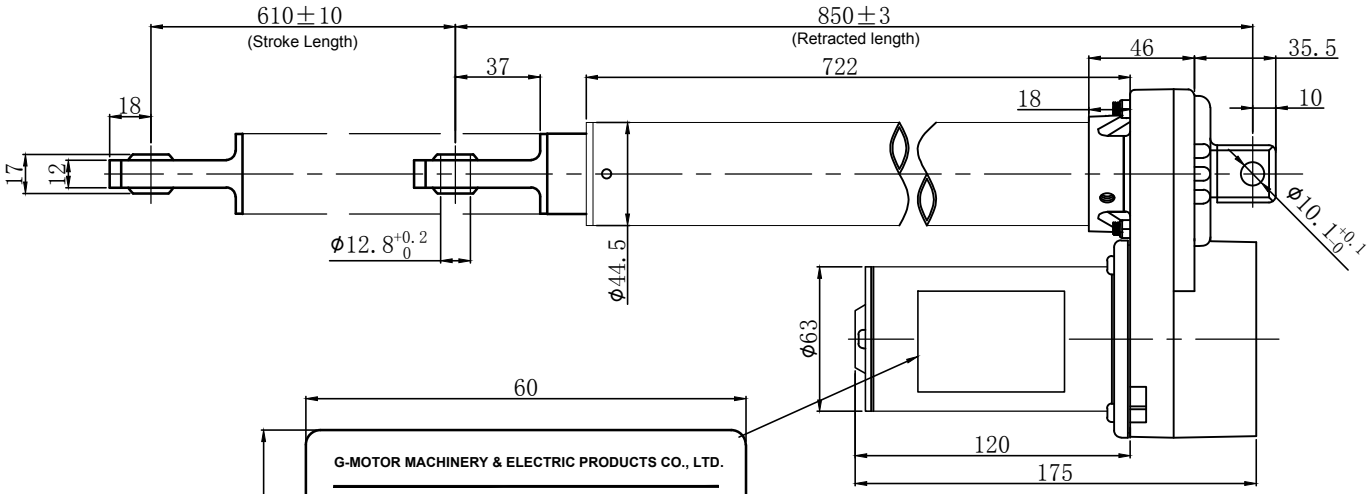

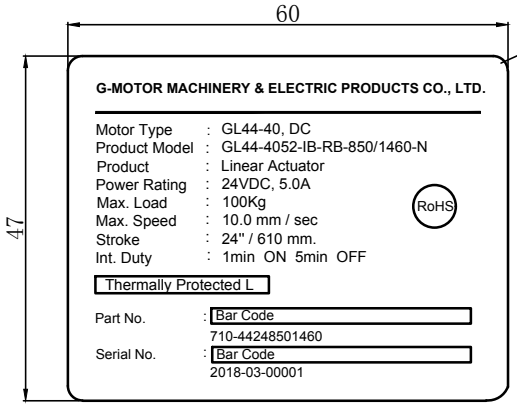

Normal Characteristics

Power Rating	: 24VDC
Ratio	: 13.4:1
Duty Cycle	: 1 Min.ON / 5 Min.OFF Max.
Insulation Class	: A
Retracted Length	: 850 mm / 33.46 inch.
Stroke Length	: 610 mm / 24 inch.
Noise	: < 58 db

No Load Characteristics

Linear Speed	: 15.0 mm/sec.
Current	: 0.6A Max.

Load Characteristics (100 kgs / 220 Lbs, Push/Pull)

Linear Speed	: 10.0 mm/sec.
Current	: 5.0A Max.

Note:
1. Internal adjustable limit switch
2. Die-cast aluminum gear housing
3. Steel inner and outer tube
4. ACME screw

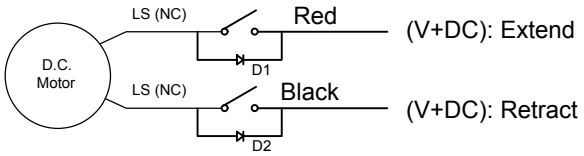

CIRCUIT DIAGRAM

Customer			Customer Confirmation:	Tolerance	Dimension	mm/inch
Product	LINEAR ACTUATOR			X ±0.2	PAGE 1 OF 1	
Model	GL44-4052-IB-RB-850/1460-N			X.X ±0.1	View Angle	
Design			Scale 1 : 2	X.XX ±0.05		
Review			G-MOTOR MACHINERY & ELECTRIC PRODUCTS CO.,LTD			
Approve						