HSF Pb RoHS

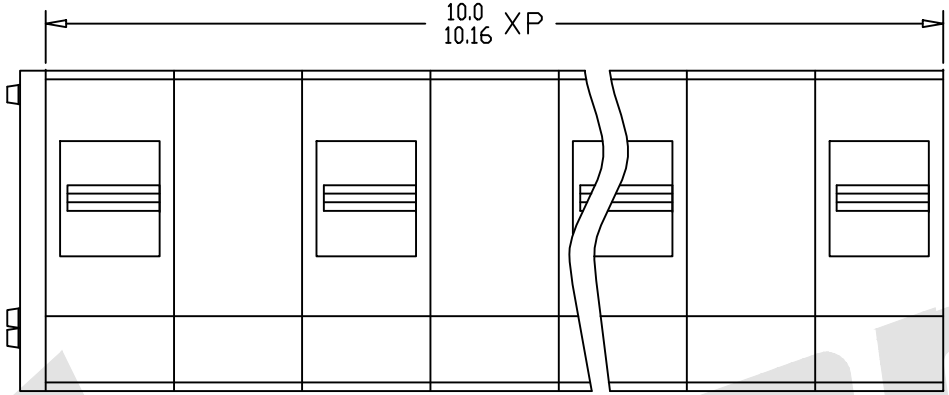

SPECIFICATION

Voltage Rating (额定电压): 300V

Current Rating(额定电流): 8A

Wire range(使用线径):

20—16AWG 1.5mm²

Housing(塑件):

PA66+23%GF, UL94V-0

Solder Pin(接触材料):

Brass.Tin Plated(黄铜, 镀锡)

Clamping(弹片):

Stainless Steel, (不锈钢)

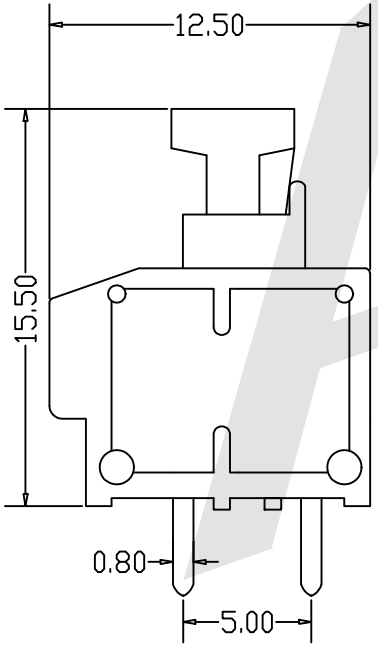

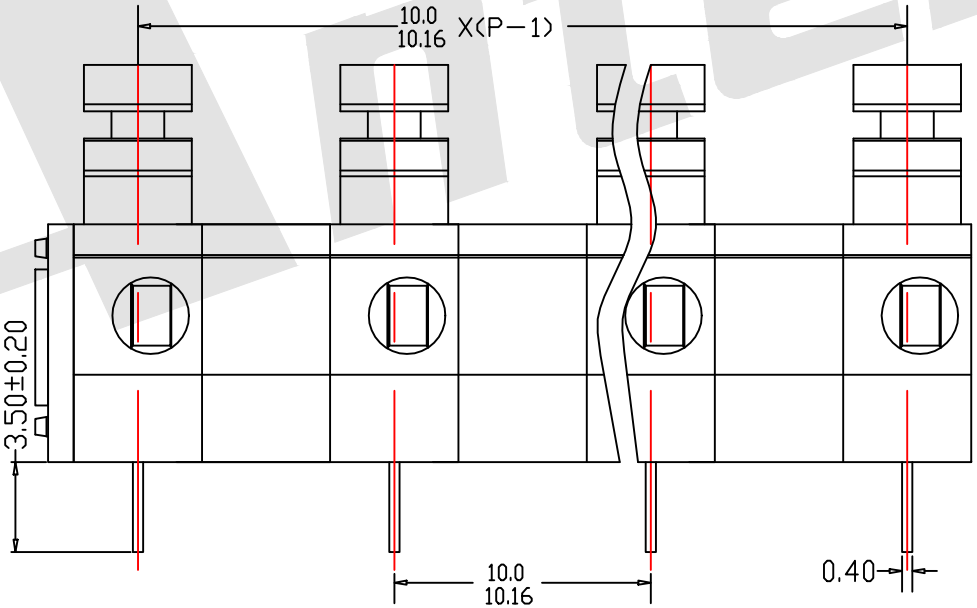

AT119 - 10.0/10.16 - XX - X - EF

Pitch:
10.0:10.0mm
10.16:10.16mm

Poles:
02: 2 Contacts
03: 3 Contacts
... ...
24: 24 Contacts

Insulator color:
A:Green
B:Blue
C:Black
G:Gray
O:Orange

EF:Series number

Unless Otherwise specified tolerance

X. ±0.35 X.XX:±0.20
X.X:±0.25 X.XXX:±0.15

SCALE: As Shown	UNIT: mm
DRAW Wu Sai	DATE 22/03/2018
CHECK BobYang	DATE 22/03/2018

3rd ANGLE PROJECTION

ANTENK ELECTRONICS CO,.LTD
Http://www.antenk.com
E-mail:sales@antenk.com

TITLE: PCB Spring Terminal Block Pitch:10.0/10.16

DRAWING NO: AT119-10.0/10.16XXX-EF

PRODUCT NO: AT119-10.0/10.16XXX-EF

REV	DESCRIPTION	DATE