Pressure relief valve, direct operated type DBD

Sizes 6 to 30 up to 63MPa up to 330 L/min

LONG LI HYDRAULIC

Feature:

–For subplate mounting

–For threaded connection

–For cartridge connection

. Sleeve with hexagon and protective cap

. Rotary knob

. Lockable rotary knob with scale

Functional description, section

The DBD pressure relief valves are direct operated poppet valves.They are used to limit the pressure in a hydraulic system. The valves mainly consist of sleeve (1), spring (2),poppet with damping spool (4) (pressure stages 2.5 to 40 MPa) or ball (4) (pressure stage 63 MPa) and adjustment element (3). The setting of the system pressure is infinitely variable via the adjustment element(3). The spring (2) pushes the poppet (4) onto the seat. The P channel is connected to the system. The pressure present in the system is applied to the poppet area (or ball).

If the pressure in channel P rises above the valve set at the spring (2), the poppet (4) opens against the spring(2). Now pressure fluid flows form channel P into channel T. The stroke of the poppet (4) is limited by a pin In order to maintain a good pressure settings over the entire pressure range the pressure range is split into 7 pressure stages. One pressure stage corresponds to a certain spring for a maximum operating pressure which may be set with it.

DBDH...K...10B/...(poppet valve)

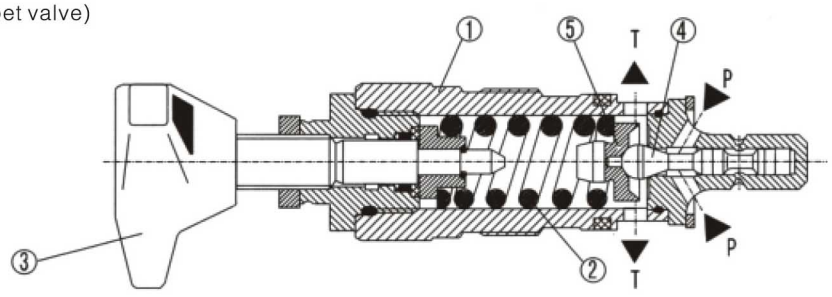

DBDA...K...10B/...(ball valve)

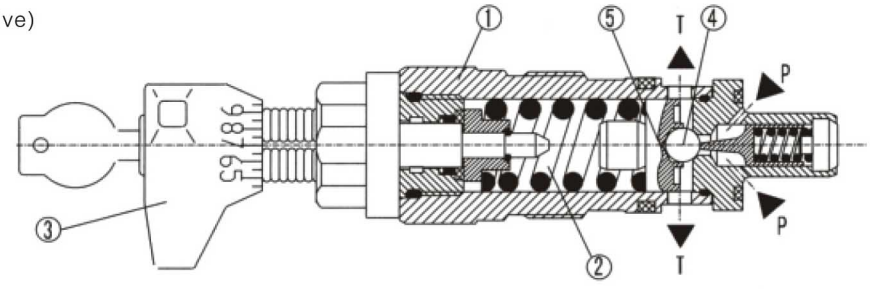

Type DBD, direct operated pressure relief valve

Symbol

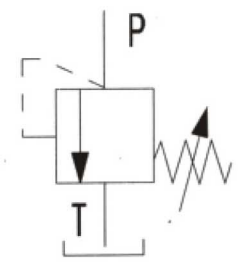

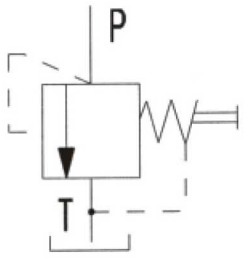

Ordering details

DBD | | | | 10 / / / | *|

Pressure relief valve, direct operated = No code

Adjusting element
Grub screw with hexagon and protective cap =S
Rotary knob =H
Lockable rotary knob =A

size			
Type of connection	G	K	P
6=	6	6	6
8=	8	–	–
10=	10	10	10
15=	15	–	–
20=	20	20	20
25=	25	–	–
30=	30	30	30

Type of connection
As cartridge valve (cartridge) = K
For threaded connections = G
For subplate mounting = P

Series 10 = 10
(10 to 19: unchanged installation and connection dimensions)

Pressure stage		
NG10	NG6 & 20	NG25 & 30
25	25	25
50	50	50
100	100	100
200	200	200
315	315	315
400	400	–
630	–	–

No code = Inch
2 = metric

No code = Mineral oil
V = Phospate ester

Further details in clear text

Technical data

Size		6	8、10	15、20	25、30
Max. operating pressure(MPa)	P□	40	63	40	31.5
	T□	31.5			
Flow	L/min	50	120	250	350
Fluid		Mineral oil or Phospate ester			
Oil temperature range	℃	–30~+80			
Viscosity range	mm^2/s	10~800			

Unit dimensions

Dimensions in mm

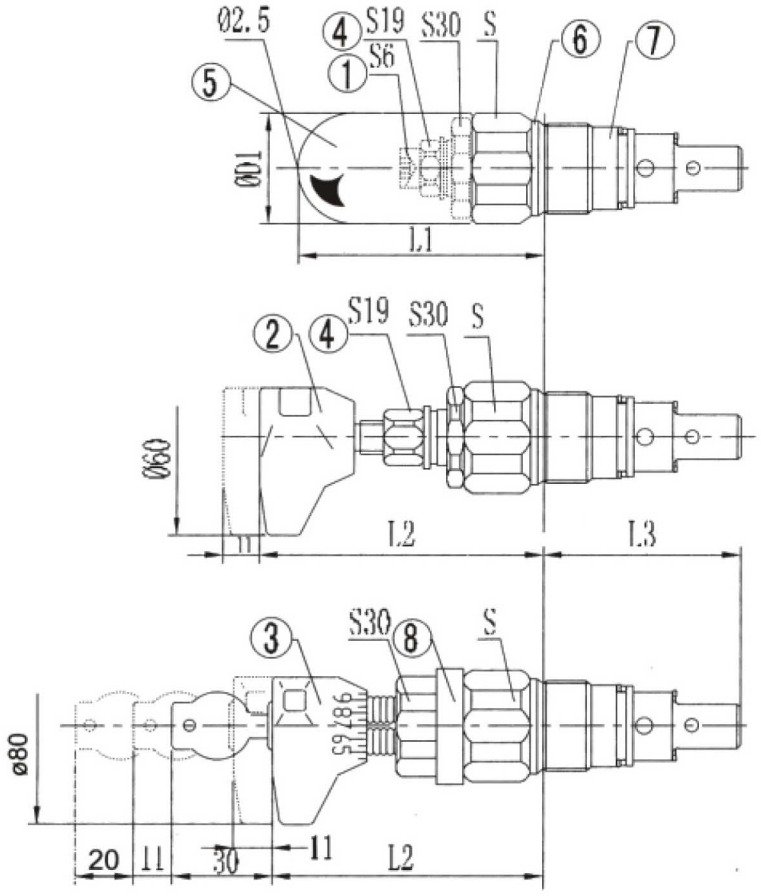

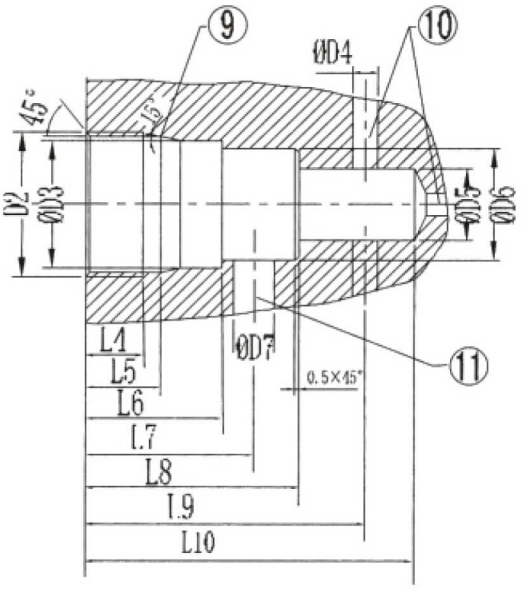

1.Grub screw with hexagon and protective cap–S
2.Rotary knob–H
3.Lockable rotary knob
4.lock nut
5.protective cap
6.Type
7.Pressure rating
8.Grading ring
9.Plug–in mounting holes
10.Plug–in mounting holesoptional Port P,optional
11.Port T

Size	ϕ M1	D2	ϕ D3H9	ϕ D4
6	34	M28x1.5	25	6
10	38	M35x1.5	32	10
20	48	M45x1.5	40	20
30	63	M60x2	55	30

Size	ϕ D5	ϕ D6H9	ϕ D7	L1	L2	L3	L4	L5	L6	L7	L8	L9	L10	S	Weight(kg)
6	15	24.9	6	72	83	64.5	15	19	30	35	45	56.5	65	32	approx 0.4
10	18.5	31.9	10	68	79	75	18	23	35	41	52	67.5	80	36	approx 0.5
20	24	39.9	20	65	77	106	21	27	45	54	70	91.5	110	46	approx 1
30	38.75	54.9	30	83	–	131	23	29	45	60	81	113.5	140	60	approx 2.2

Unit dimensions

Dimensions in mm

Pressure regulating device see before

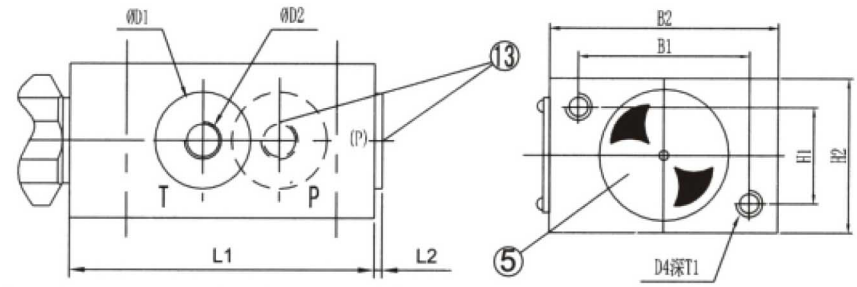

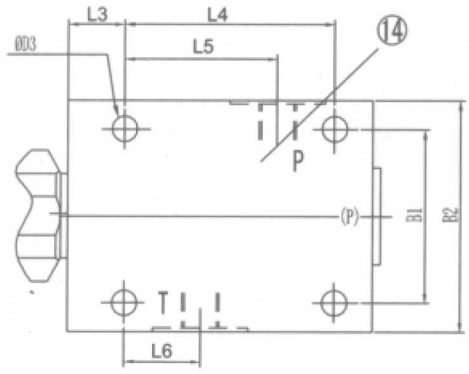

Size	ϕD1	D2	
		Metric screw thead	Inch screw thead
8	25	M14x1.5	G1/4"
8(10)	(28)34	(M18x1.5)M22x1.5	(G3/8")G1/2"
15(20)	(42)47	(M27x2)M33x2	(G3/4")G1"
(25)30	(56)61	(M42x5)M48x2	(G1 1/4")G1 1/2"

Size	ϕD3	ϕD4	B1	B2	H1	H2	L1	L2	L3	L4	L5	L6	T1	Weight(kg)
6	6.6	M6	45	60	25	40	80	4	15	55	40	20	10	approx 1.5
(8)10	9	M8	60	80	40	60	100	4	20	70	49	21	20	approx 3.7
(15)20	9	M8	70	100	50	70	135	(4)5.5	20	100	65	34	20	approx 6.4
(25)30	11	M10	100	130	60	90	180	5.5	25	130	85	35	25	approx 13.9

Unit dimensions

Dimensions in mm

Pressure regulating device see before

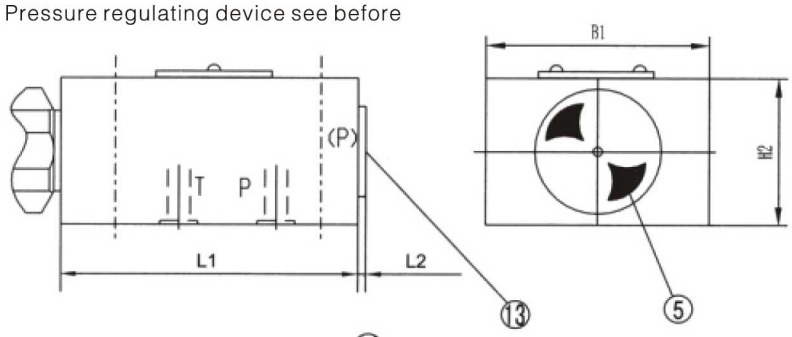

5.Sleeve with hexagon and protective cap

13.Port P, optional

14.Name plate

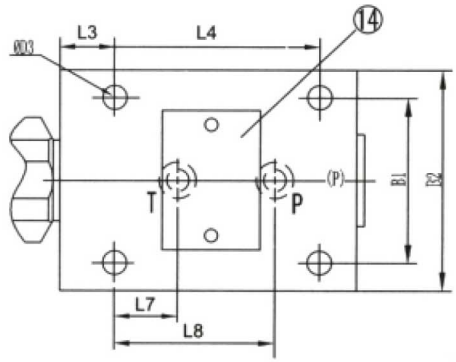

Size	L7	L8	Subplate mounting	Valve fixing screws GB/T 70.1-2000
6	20	40	G300/1	M6x50-10.9
10	21	45	G302/2	M8x70-10.9
20	34	65	G304/1	M8x90-10.9
30	35	85	G306/1	M10x110-10.9