ZJ 系列渣浆泵

Series ZJ Slurry Pump

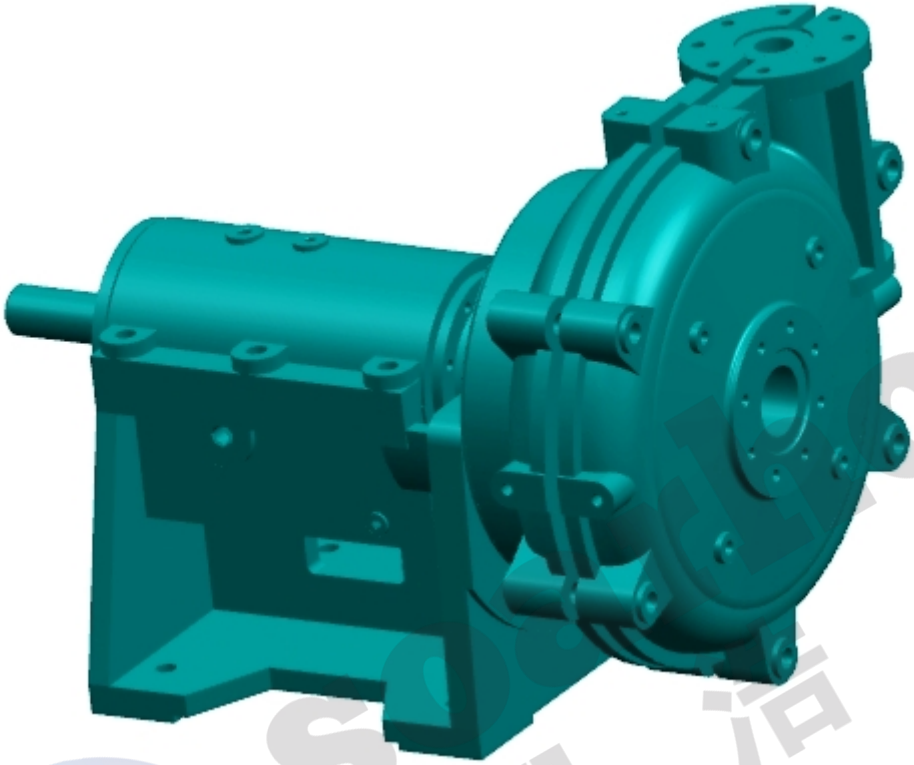

- 公司简介 Enterprise Profile

石家庄翔浩机械有限公司，是以矿山、电力用渣浆泵、脱硫泵、疏浚泵、清水泵为主的工业水泵专业生产企业，集研发、设计、制造、营销、服务为一体，具有严格的质量保证及科学完善的服务体系。

公司技术力量雄厚，拥有资深的水泵设计、制造、应用工程师团队，立足持续为用户带来更大价值，不断提高服务水平与质量。我们不单单向用户提供产品，还可依据客户的工矿需求，采用系统一体化的设计方法，为客户提供渣浆输送的一整套解决方案，使得用户在环保、节能、运营持久、降低产品使用成本等方面取得了显著效果。

公司坚持“技术创新化、管理严格化、生产定制化、服务专业化”的经营理念，全力提升企业现代化管理水平，使企业实现了持续快速发展。

公司的主要产品为ZGB、ZJ、AH、HH、M型渣浆泵、WN型挖泥泵、TL型脱硫泵、G型砂砾泵、SP型液下泵、HDSN型双吸泵、WQ型潜污泵、IS型清水泵等，广泛应用于环境保护工程、污水处理、城市工厂给排水、各种水利工程、冶金、矿山、电力、煤炭、疏浚、采砂、石油化工、建材、火电烟气脱硫等等诸多领域。国内市场占有率逐年递增，国际市场的占有份额

不断提升，产品出口至东南亚、北美、欧洲、中亚、东亚等多个国家和地区。

长期以来，本公司坚持“诚信为本、客户至上”的原则，与众多厂家建立了长期合作关系，并赢得了广大客户的一致好评！

坚信凭借我们更优的产品，完善的服务，良好的信誉，必将赢得更多用户！

Shijiazhuang Soarho Machinery CO.,LTD, is a professional manufacture base of slurry pump, mine pump, FGD pump, dredge pump and clean water pump, combining scientific research, design, manufacture, marketing and service in one, with strict quality control system and science complete service system.

Having strong technical force, the company which has a senior pump design, manufacturing and application engineer team, continues to improves level and quality of service in order to bring greater value to the users. We not only provide products to users, but also provide a complete solution for slurry transportation for user to achieve a significant effect in environmental protection , energy saving , lasting trouble-free operation and cost reduction and so on, adopting a systematic and integrated design method and according to the working condition and the needing of user.

Adhering to the concept of ‘technical innovation’, ‘strict management’ ,’ customized production’ and ’ professional service ’, we strive to improve the modern management level and make the enterprises achieve sustained and rapid development.

The main products of the company are ZGB,ZJ,AH,HH,M slurry pumps ,WN dredge pumps , TL FGD pumps, G gravel pumps, SP sump pumps, HDSN double suction pumps. WQ submersible sewage pumps, IS clean water pumps and so on. They are widely used in many fields, such as environmental protection engineering, sewage treatment, municipal factory and water supply and drainage, various water conservancy projects, metallurgy, mine, electric power, coal, dredging, sand mining, petrochemical, building materials, thermal power flue gas desulfurization etc. The share of domestic market is increasing year by year, and the share of the international market is increasing. Products exported to Southeast Asia, North America, Europe, Central Asia, East Asia and many other countries and regions.

For a long time, adhering to the principle of "honesty and customer first", our company has established a long-term cooperative relationship with many manufacturers, and has won the praise of the customers.

Firmly believe that we will win more users by virtue of our better products, perfect service and good reputation.

- **产品介绍 Product Introduction**

ZJ型泵为单级、单吸、离心式渣浆泵，过流部件采用高铬合金铸铁，具有高抗磨蚀性、抗腐蚀性、抗冲击性能，从而提高了泵的使用寿命。该泵按结构形式分为卧式（ZJ系列）和立式（ZJL系列）。

ZJ型渣浆泵泵适用于电力、冶金、煤炭、建材、化工等行业，主要是用来输送含有固体颗粒的磨蚀性浆体，如选矿厂处理精矿尾矿，电厂除灰渣，选煤厂输送煤泥和重介选煤、海岸河道采矿作业输送矿浆等。其所能处理的最大重量浓度为：灰浆45%，矿浆60%，根据客户需要可串联或并联运行。

Series ZJ pump is a single-stage, single-suction, centrifugal slurry pump. High chromium alloy cast iron is used in the wet parts, which has high abrasion resistance, corrosion resistance and impact resistance, thus improving the service life of the pump. The pump is divided into horizontal (ZJ series) and vertical (ZJL series) by structure.

Series ZJ pump can applicable widely to electric power, metallurgy, mine, coal, constructional material and chemical industry departments , mainly used for handling mixtures containing abrasive and corrosive solids , such as treatment of concentrate and tailings, power plant ash residue, coal preparation plant conveying slime and heavy medium coal, coastal channel mining operations conveying ore pulp. It can handle the maximum weight concentration: mortar 45%, pulp 60%, according to customer needs can operated in series or in parallel working together.

- **产品特点 Product Feature**

1、型号全、性能稳定，覆盖工况广、选型方便。每种规格口径的泵根据扬程不同有不同的叶轮直径供选择。

2、采用双泵壳结构，方便更换过流部件,根据压力需要外泵壳采用球磨铸铁、内壳采用高铬抗磨白口铸铁或铸钢。

3、按轴承箱结构不同润滑方式分为三种：箱式采用稀油润滑，圆筒式采用油脂润滑，轴承箱嵌盖式采用稀油或油脂润滑。

4、泵壳为垂直中开式,出水口可按45°间隔旋转八个不同的位置。

5、轴封采用填料密封、填料加付叶轮密封和集装式机械密封，适应不同的工况要求。

1. Model complete, stable performance, covering a wide range of working conditions, easy to select. Different impeller diameters are available for each type of pump according to different head.
2. The double pump housing structure is adopted to facilitate the replacement of over-current parts. According to the pressure requirements, the outer pump shell is made of ductile cast iron, and the inner shell is made of high-chrome anti-wear white cast iron or cast steel.
3. There are three lubrication modes according to the bearing box structure: oil for box type, grease for cylinder type, and oil or grease for bearing box with inserted cover.
4. The casing for vertical axially split discharge can be rotated at 45° interval eight different positions.
5. The shaft seal adopts the packing seal, the expeller seal combined with packing seal, the mechanical seal, which adapts to different working conditions.

- **性能范围 Range of Performance**

流 量 Capacity Q：15-2300m³/h

扬 程 Head H：12-125m

吐出口直径 Discharge diameter：40-350mm

- **型号说明 Model Code**

150 ZJ (L) Ⅱ A 60

- 60：叶轮直径（mm）Impeller diameter(mm)
- A：叶轮叶片数目 Number of vanes（A=5 B=4 C=3）
- Ⅱ：Ⅱ为二级泵（Ⅰ为一级泵）Ⅱ Denotes second stage pump (Ⅰ Denotes first stage pump)
- (L)：立式泵 Vertical slurry pump
- ZJ：渣浆泵 Slurry pump
- 150：泵吐出口直径（mm）Discharge diameter (mm)

soarho 翔浩

- 结构图 **Construction description**

1. ZJ 型渣浆泵 **Series ZJ slurry pump**

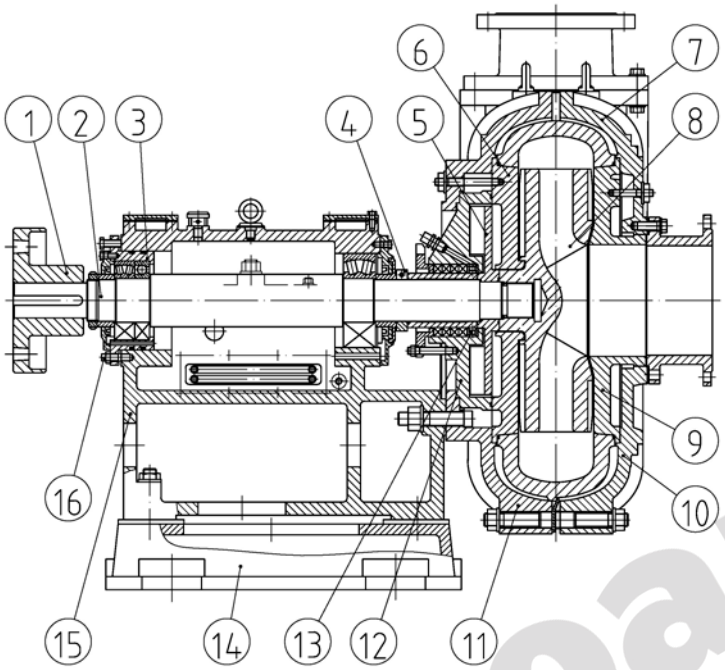

1	联轴器	Coupling
2	轴	Shaft
3	轴承箱	Bearing housing
4	拆卸环	Disassembly ring
5	副叶轮	Expeller
6	后护板	Rear liner
7	蜗壳	Volute casing
8	叶轮	Impeller
9	前护板	Throat bushing
10	前泵壳	Cover plate
11	后泵壳	Frame plate
12	填料箱	Stuffing box
13	水封环	Lantern ring
14	底座	Base Frame
15	托架	Support
16	调节螺钉	Adjusting bolts

2. ZJL 型渣浆泵 Series ZJL slurry pump

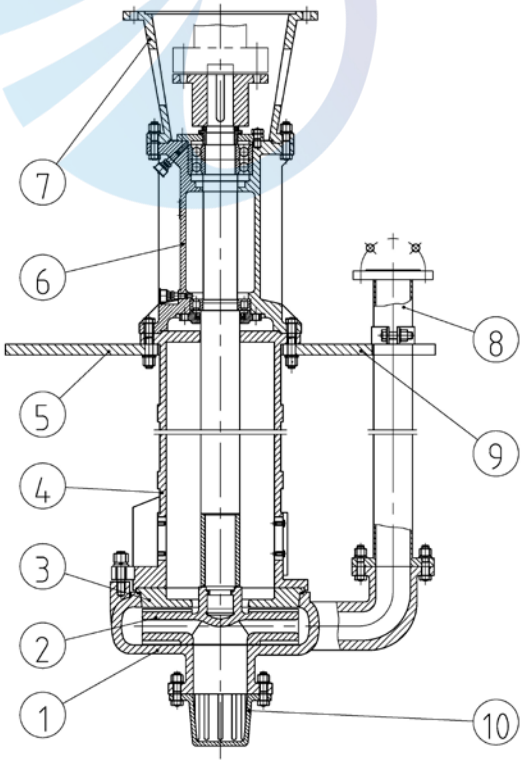

1	蜗壳	Volute casing
2	叶轮	Impeller
3	后护板	Rear liner
4	支架	Support
5	左支撑板	Left supporting plate
6	轴承体	Bearing body
7	电机支座	Motor supporting
8	后护板	Rear liner
9	右支撑板	Right supporting plate
10	下滤网	Lower strainer

soarho 翔浩

- **型谱 Selection Chart**

ZJ 型 渣 浆 泵 型 谱 (I)

Type ZJ Slurry Pump Selection Chart (I)

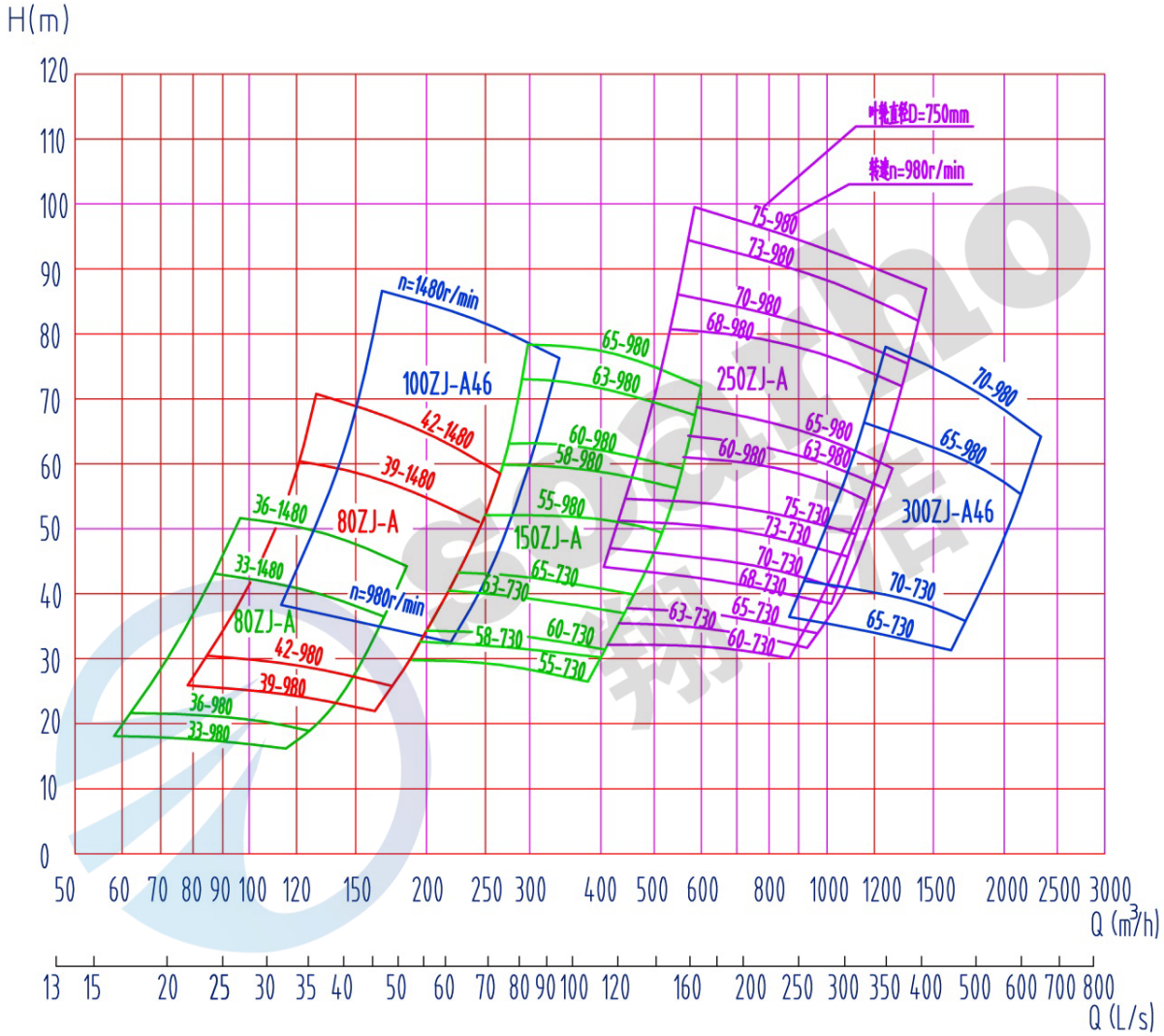

注：清水近似性能，仅供初步选型用。

NOTE: Apprpximate performance for clear water,to be used for primary selection only.

ZJ 型 渣 浆 泵 型 谱 (II)

Type ZJ Slurry Pump Selection Chart (II)

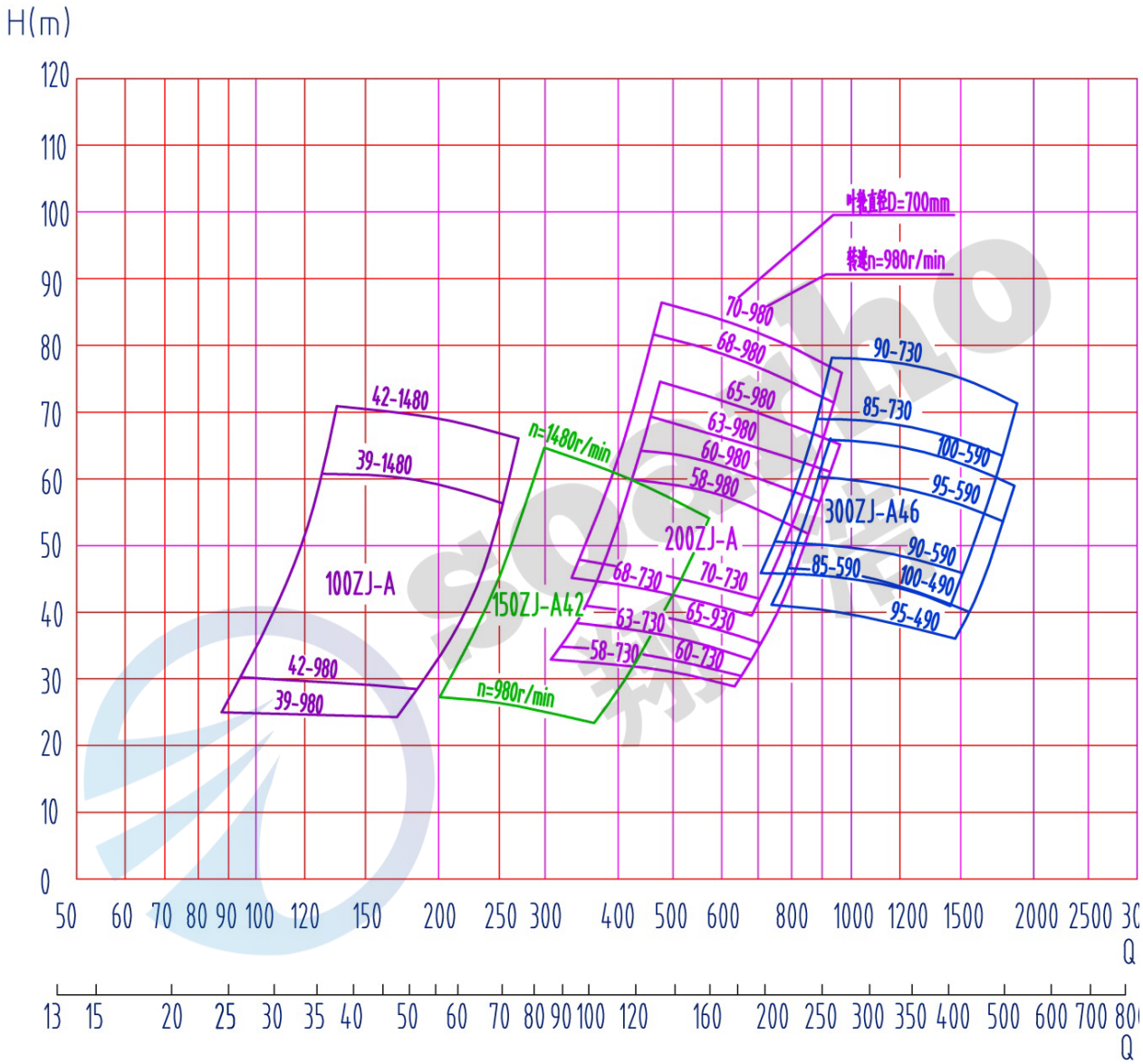

注：清水近似性能，仅供初步选型用。

ZJ 型渣浆泵型谱(III)

Type ZJ Slurry Pump Selection Chart (III)

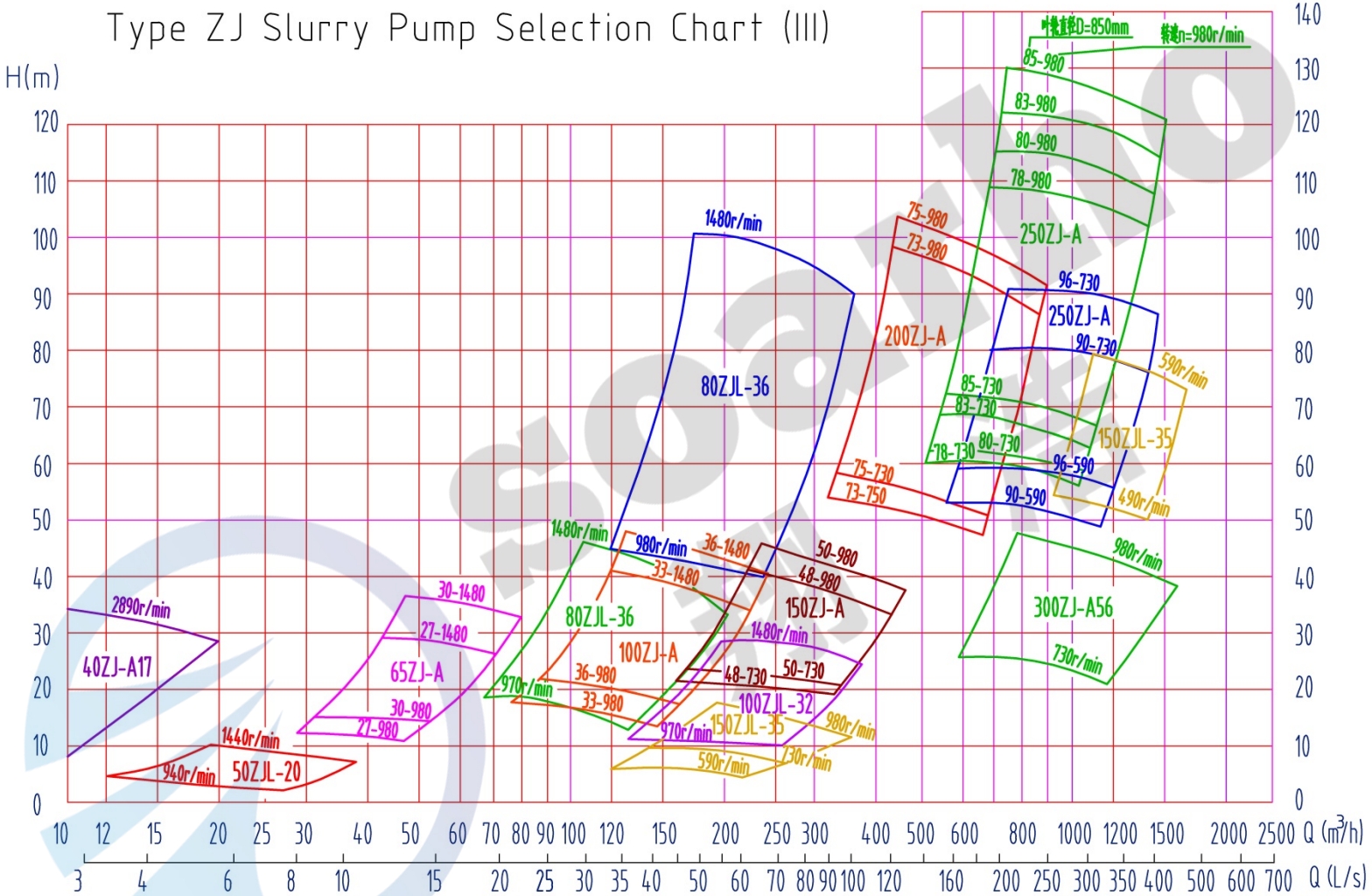

注：清水近似性能，仅供初步选型用。

NOTE: Apprpximate performance for clear water,to be used for primary selection only.

- 性能参数表 **Performance List**

型号 Type	允许配带最大功率 Allowable mating MAX. power (KW)	Clear water performance					间断通过最大粒径 Particle max. size Handled occasionally (mm)	泵重 Pump weight .(kg)
		流量 Capacity （l/s）	扬程 Head (m)	转速 Speed (r/min)	最高效率 MAX.Eff. %	汽蚀余量 NPSHr (m)		
350ZJ-F100	560	526~2339	14.9~62.8	300~590	77.6	5.8	96	6465
300ZJ-A100	450	464~1826	15.3~65.2	300~590	81.1	5.0	88	5265
300ZJ-A95	400	441~1735	13.8~58.8	300~590	78.1	4.1	88	5220
300ZJ-A90	560	505~1844	21.2~79.9	400~730	82.8	4.1	85	5005
300ZJ-A85	450	477~1742	18.9~71.3	400~730	79.8	4.8	85	4965
300ZJ-A70	630	635~2333	16.0~76.8	490~980	80.4	4.8	92	3560
300ZJ-A65	500	589~2166	13.8~66.2	490~980	77.4	6.0	92	3531
300ZJ-A56	250	395~1568	9.7~46.0	490~980	80.9	6.0	96	3030
250ZJ-A103	560	402~1573	29.7~110.5	400~730	74.5	5.5	69	5085
250ZJ-A96	560	403~1466	25.4~93.7	400~730	77.8	5.3	69	5035
250ZJ-A90	450	378~1374	22.3~82.4	400~730	73.8	5.3	69	4980
250ZJ-A85	800	376~1504	30.1~128.7	490~980	76.5	5.1	76	4530
250ZJ-A83	800	367~1469	28.7~122.7	490~980	75.5	5.1	76	4514
250ZJ-A80	710	354~1416	26.7~114.0	490~980	73.5	5.0	76	4490
250ZJ-A78	630	415~1796	21.1~102.5	490~980	71.5	5.0	76	4474
250ZJ-A75	560	300~1480	20.8~97.5	490~980	77.5	4.9	72	3480
250ZJ-A73	500	292~1441	19.7~92.4	490~980	76.5	4.9	72	3466
250ZJ-A70	450	280~1381	18.1~84.9	490~980	74.5	4.8	72	3446
250ZJ-A68	450	272~1342	17.1~80.1	490~980	73.5	4.8	72	3432
250ZJ-A65	315	299~1249	15.4~71.0	490~980	76.5	4.7	72	3020
250ZJ-A63	315	290~1211	14.4~66.7	490~980	75.9	4.7	72	3008
250ZJ-A60	280	276~1153	13.1~60.5	490~980	73.9	4.7	72	2991
200ZJ-A85	560	221~907	32.0~133.7	490~980	70.5	5.0	54	4110
200ZJ-A75	355	225~900	22.8~102.9	490~980	74.4	4.5	56	3070
200ZJ-A73	355	219~876	21.6~97.5	490~980	73.1	4.5	56	3056

型号 Type	允许配带最大功率 Allowable mating MAX. power (KW)	Clear water performance					间断通过最大粒径 Particle max. size Handled occasionally (mm)	泵重 Pump weight .(kg)
		流量 Capacity （l/s）	扬程 Head (m)	转速 Speed (r/min)	最高效率 MAX.Eff. %	汽蚀余量 NPSHr (m)		
200ZJ-A70	315	205~976	19.4~86.4	490~980	75.6	4.0	56	2465
200ZJ-A68	315	199~948	18.3~81.5	490~980	74.6	4.4	56	2453
200ZJ-A65	250	235~950	16.4~72	490~980	79.6	4.3	62	2323
200ZJ-A63	250	228~921	15.4~67.6	490~980	78.6	4.3	62	2311
200ZJ-A60	185	218~870	13.9~62	490~980	83.5	4.1	62	2223
200ZJ-A58	185	211~841	13~57.9	490~980	82.5	4.1	62	2214
150ZJ-A71	220	142~552	21.8~93.8	490~980	69.8	4.0	48	2263
150ZJ-A70	185	93~401	20~91.2	490~980	62.3	3.0	37	2245
150ZJ-A65	200	150~600	17.4~75.7	490~980	70.8	3.9	48	2223
150ZJ-A63	185	146~582	16.3~71.1	490~980	69.8	3.9	48	2211
150ZJ-A60	160	135~550	14.7~63.5	490~980	75.9	3.8	48	2203
150ZJ-A58	132	131~532	13.7~59.3	490~980	74.9	3.8	48	2033
150ZJ-C58	160	134~596	12.8~61.0	490~980	69.1	3.8	75	2063
150ZJ-A55	110	124~504	12.3~53.4	490~980	72.9	3.8	48	2019
150ZJ-A57	110	95~427	13.2~56.3	490~980	67.8	2.9	32	2023
150ZJ-A50	75	115~460	9.5~43.1	490~980	76.8	3.2	48	1735
150ZJ-A48	75	111~442	8.7~39.7	490~980	75.8	3.2	48	1728
150ZJ-C42	132	142~550	12.1~62.8	700~1480	77.1	4.5	69	1605
100ZJ-A50	160	85~360	20.5~100.2	700~1480	69.6	4.1	34	1475
100ZJ-A46	132	79~331	17.3~84.8	700~1480	67.6	4.1	34	1461
100ZJ-A42	90	66~275	14.7~70.8	700~1480	71	3.9	35	1075
100ZJ-A39	75	61~255	12.6~61	700~1480	69	3.9	35	1064
100ZJ-B42	90	83~365	12.7~66.8	700~1480	71.6	5.1	40	1085
100ZJ-A36	55	61~245	9.7~49.5	700~1480	71.6	3.6	32	1010
100ZJ-A33	45	56~225	8.2~41.6	700~1480	69.6	3.6	32	1003
80ZJ-A52	160	51~242	22.1~109.8	700~1480	56.3	4.3	21	1465
80ZJ-A42	75	61~204	14.4~70.4	700~1480	66.7	3.5	24	1053

型号 Type	允许配带最大功率 Allowable mating MAX. power (KW)	Clear water performance					间断通过最大粒径 Particle max. size Handled occasionally (mm)	泵重 Pump weight .(kg)
		流量 Capacity （l/s）	扬程 Head (m)	转速 Speed (r/min)	最高效率 MAX.Eff. %	汽蚀余量 NPSHr (m)		
80ZJ-A39	55	57~189	12.4~60.7	700~1480	64.7	3.5	24	1042
80ZJ-A36	45	46~190	9.6~51.4	700~1480	67.7	3.0	24	980
80ZJ-A33	37	43~174	8~43.2	700~1480	65.7	3.0	24	973
65ZJ-A30	15	23~79	7.4~34.8	700~1480	63.5	3.0	19	504
65ZJ-A27	11	20~71	6~28.2	700~1480	61.5	3.0	19	500
50ZJ-A50	90	27~111	22.3~110.7	700~1480	45.1	3.8	13	1378
50ZJ-A46	55	23~94	17.9~85.8	700~1480	44.7	2.9	14	1082
50ZJ-A33	18.5	12~54	7.7~42.5	700~1480	42.1	6.0	13	537
40ZJ-A19	15	8~35	12.8~57.1	1430~2930	58.8	4.9	11	173
40ZJ-A17	7.5	4~23	9~44.6	700~1480	52.4	4.5	11	121
150ZJL-A35	37	99~364	3.0~17.9	490~980	69.0	/	15	800
100ZJL-A34	45	74~293	5.5~36.8	700~1480	65.8	/	14	630
80ZJL-A36	45	50~201	7.3~45.5	700~1480	58.2	/	12	650
65ZJL-A30	18.5	18~98	5.9~34.7	700~1470	53.7	/	8	440
50ZJL-A20	4	8-38	1.4~10.7	700~1440	38.6	/	10	240
50ZJL-B40	30	15-65	8.6~58.3	700~1470	34.1	/	9	540
50ZJL-A35	22	19-86	7.3~47.1	700~1470	48.1	/	15	500
50ZJL-A20J	4	8-38	1.4~10.7	700~1440	38.6	/	10	240
40ZJL-A35	18.5	9.4~47.6	8.1~48	700~1470	38.7	/	7	500
40ZJL-B25	4	4.9~22.9	4.0~21.5	700~1440	37.6	/	8	225
40ZJL-A21	4	4.6~25.9	3.3~17.0	700~1440	44.6	/	10	210

注：1、NPSHr 是指最高转速时规定点之值。

2、正常通过粒度为允许间断通过的最大粒度的 56%。

NOTE：1. NPSHr refers to the value at the specified point at the max. speed.

3. The normal size of particle handled is 56% of the max. size that can be handled occasionally.

- 外形尺寸图 **Outline Drawing**

(1)ZJ 分体底座　ZJ Fission Base

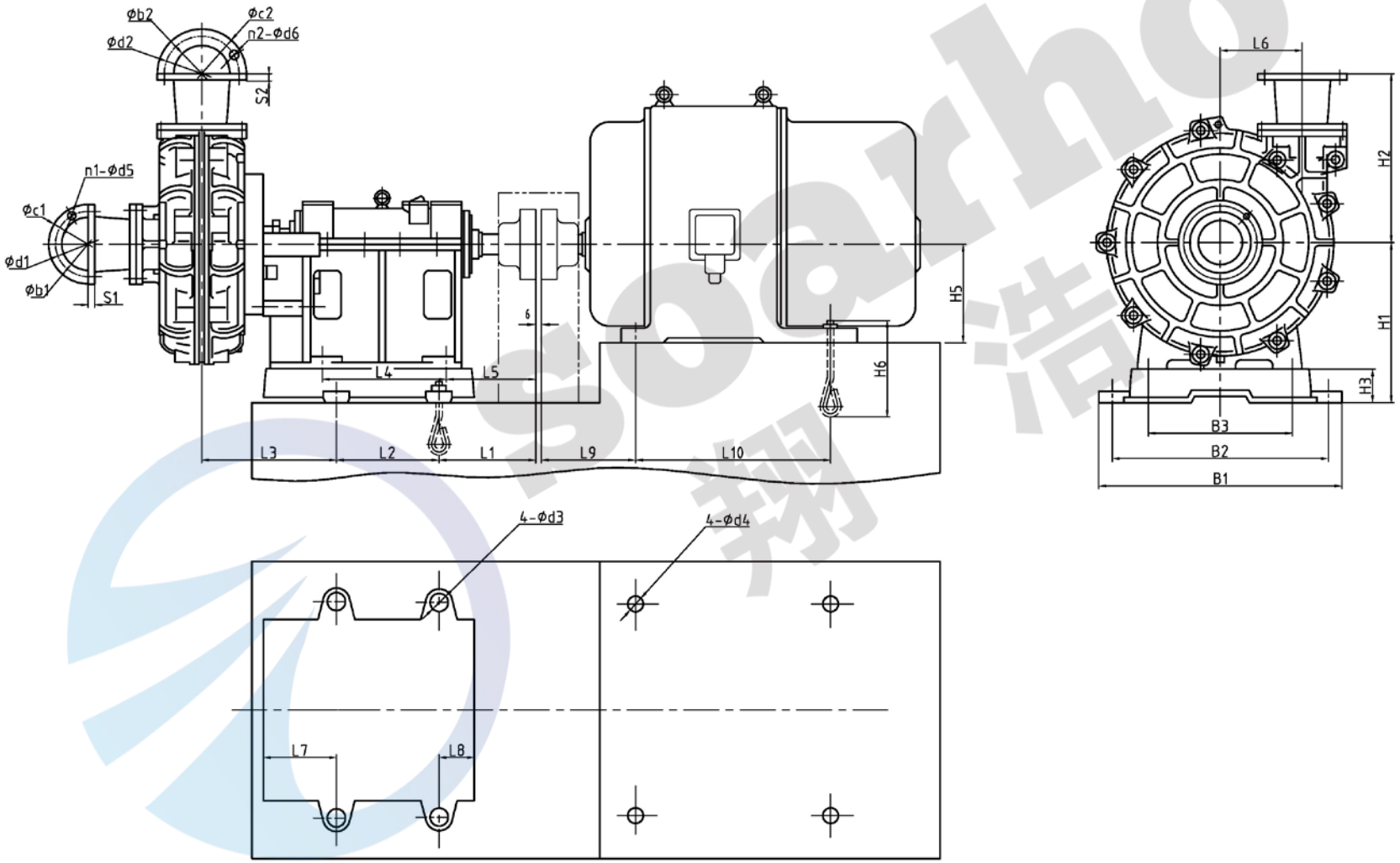

型号 Type	电机 Motor	L	L1	L2	L3	L4	L5	L6	L7	L8	L9	L10	H1	H2	H3	H4	H5	H6	B1	B2	B3	B4	b1	c1	d1	n1	d5	b2	c2	d2	n2	d6	S1	S2	d3	d4
300ZJ-I-A110	Y500-10 400KW Y500-10 500KW Y500-10 560KW	2358	785	630	470	820	690	610	240	240	725	1250	1080	978	260	800	500	800	1190	1100	790	900	400	565	515	16	25	300	460	410	12	26	32	30	40	42
	Y450-12 250KW Y500-12 315KW										605 725	1120 1250					450 500	700 800				800 900														35 42
300ZJ-I-A100	Y450-10 280KW Y500-10 450KW	2358	785	630	470	820	690	610	240	240	605 725	1120 1250	1080	978	260	800	450 500	700 800	1190	1100	790	800 900	400	565	515	16	25	300	460	410	12	26	36	34	40	35 42
	Y450-12 220KW Y450-12 250KW										605	1120					450	800				800														35
300ZJ-I-A95	Y450-10 250KW Y500-10 400KW	2358	785	630	470	820	690	610	240	240	605 725	1120 1250	1080	978	260	800	450 500	700 800	1190	1100	790	800 900	400	565	515	16	25	300	460	410	12	26	36	34	40	35 42
	Y450-12 220KW										605	1120					450	700				800														35
300ZJ-I-A90	Y450-8 355KW Y500-8 500KW Y500-8 560KW	2151	450	630	605	800	497	560	372	108	605 725 725	1120 1250 1250	1060	928	260	800	450 500 500	700 800 800	1200	1110	850	800 900 900	350	500	460	16	23	300	460	410	12	25	34	34	40	35 42
	Y450-10 220KW Y450-10 280KW										605	1120					450	700				800														35
300ZJ-I-A85	Y450-8 315KW Y450-8 450KW	2151	450	630	605	800	497	560	372	108	605	1120	1060	928	260	800	450	700	1200	1110	850	800	350	500	460	16	23	300	460	410	12	25	34	34	40	35
	Y355L2-10 160KW Y450-10 220KW Y450-10 250KW										424 605 605	630 1120 1120					355 450 450	600 700 700				610 800 800														28 35 35
300ZJ-I-A70	Y450-6 450KW Y450-6 630KW	1931	437	630	415	740	397	470	200	170	605	1120	810	758	180	800	450	700	1200	1110	780	800	350	500	460	16	23	300	460	410	12	25	30	34	40	35
	Y355L1-8 185KW Y400-8 250KW										424 605	630 1000					355 400	600 700				610 710														28
300ZJ-I-A65	Y400-6 355KW Y450-6 500KW	1931	437	630	415	740	397	470	200	170	545 605	1000 1120	810	758	180	800	400 450	700	1200	1110	780	710 800	350	500	460	16	23	300	460	410	12	25	30	34	40	35
	Y355M2-8 160KW Y355L2-8 200KW										424	560 630					355	600				610														28
300ZJ-I-A56	Y355M2-6 185KW Y355-6 250KW	1936	453	630	409	740	413	400	200	170	424 525	560 630	810	748	180	800	355	600	1200	1110	780	610 630	350	485	445	16	23	300	460	410	12	25	30	34	40	28
	Y315M2-8 90KW Y315M3-8 110KW										386	457					315	600				508														28
250ZJ-I-A96	Y450-8 355KW Y450-8 450KW Y500-8 560KW	2135	450	630	594	800	497	565	372	108	605 605 725	1120 1120 1250	1060	948	260	800	450 450 500	700 700 800	1200	1110	850	800 800 900	300	460	410	12	26	250	425	370	12	30	42	34	40	35 35 42
	Y450-10 220KW Y450-10 250KW Y450-10 280KW										605	1120					450	700				800														35
250ZJ-I-A90	Y400-8 280KW Y450-8 400KW Y450-8 450KW	2135	450	630	594	800	497	565	372	108	545 605 605	1000 1120 1120	1060	948	260	800	400 450 450	700	1200	1110	850	710 800 800	300	460	410	12	26	250	425	370	12	30	42	34	40	35
	Y355L2-10 160KW Y450-10 220KW Y450-10 250KW										424 605 605	630 1120 1120					355 450 450	600 700 700				610 800 800														28 35 35
250ZJ-I-A85	Y450-6 560KW Y500-6 710KW Y500-6 800KW	2135	582	630	465	800	497	520	230	230	605 725 725	1120 1250 1250	900	898	190	800	450 500 500	700 800 800	1200	1110	850	800 900 900	300	460	410	12	26	250	425	370	12	30	42	34	40	35 42 42
	Y400-8 220KW Y450-8 315KW										545 605	1000 1120					400 450	700				710 800														35
250ZJ-I-A83	Y450-6 500KW Y500-6 710KW	2135	582	630	465	800	497	520	230	230	605 725	1120 1250	900	898	190	800	450 500	700 800	1200	1110	850	800 900	300	460	410	12	26	250	425	370	12	30	42	34	40	35 42
	Y400-8 220KW Y400-8 280KW Y450-8 315KW										545 545 605	1000 1000 1120					400 400 450	700				710 710 800														35

型号 Type	电机 Motor	L	L1	L2	L3	L4	L5	L6	L7	L8	L9	L10	H1	H2	H3	H4	H5	H6	B1	B2	B3	B4	b1	c1	d1	n1	d5	b2	c2	d2	n2	d6	S1	S2	d3	d4
250ZJ-I-A80	Y450-6 450KW Y450-6 630KW	2135	582	630	465	800	497	520	230	230	605	1120	900	898	190	800	450	700	1200	1110	850	800	300	460	410	12	26	250	425	370	12	30	42	34	40	35
	Y355L1-8 185KW Y400-8 250KW Y400-8 280KW										424 545 545	630 1000 1000					355 400 400	600 700 700				610 710 710														28 35 35
250ZJ-I-A78	Y450-6 450KW Y450-6 560KW Y450-6 630KW	2135	582	630	465	800	497	520	230	230	605	1120	900	898	190	800	450	700	1200	1110	850	800	300	460	410	12	26	250	425	370	12	30	42	34	40	35
	Y355L1-8 185KW Y400-8 220KW Y400-8 250KW										424 545 545	630 1000 1000					355 400 400	600 700 700				610 710 710														28 35 35
250ZJ-I-A75	Y400-6 315KW Y450-6 450KW Y450-6 500KW	1913	454	630	392	740	414	460	200	170	545 545 605	1000 1120 1120	810	818	180	800	400 450 450	700	1200	1110	780	710 800 800	300	460	410	12	23	250	405	355	12	25	34	32	40	35
	Y355M1-8 132KW Y355L1-8 185KW Y400-8 220KW										424 424 545	560 630 1000					355 355 400	600 600 700				610 610 710														28 28 35
250ZJ-I-A73	Y400-6 280KW Y400-6 400KW Y450-6 500KW	1913	454	630	392	740	414	460	200	170	545 545 605	1120	810	818	180	800	400 400 450	700	1200	1110	780	710 710 800	300	460	410	12	23	250	405	355	12	25	34	32	40	35
	Y Y355M1-8 132KW Y355L1-8 185KW Y400-8 220KW										424 424 545	560 630 1000					355 355 400	600 600 700				610 610 710														28 28 35
250ZJ-I-A70	Y355-6 250KW Y400-6 355KW Y450-6 450KW	1913	454	630	392	740	414	460	200	170	525 545 605	900 1000 1120	810	818	180	800	355 400 450	600 700 700	1200	1110	780	630 710 800	300	460	410	12	23	250	405	355	12	25	34	32	40	28 35 35
	Y315M3-8 110KW Y355M2-8 160KW Y355L1-8 185KW										386 424 424	457 560 630					315 355 355	600				508 610 610														28
250ZJ-I-A68	Y355-6 250KW Y400-6 315KW Y400-6 355KW	1913	454	630	392	740	414	460	200	170	525 545 545	900 1000 1000	810	818	180	800	355 400 400	600 700 700	1200	1110	780	630 710 710	300	460	410	12	23	250	405	355	12	25	34	32	40	28 35 35
	Y315M3-8 110KW Y355M1-8 132KW Y355M2-8 160KW										386 424 424	457 560 560					315 355 355	600				508 610 610														28
250ZJ-I-A65	Y355-6 250KW Y400-6 280KW Y400-6 315KW	1913	454	630	392	740	414	410	200	170	525 545 545	900 1000 1000	810	748	180	800	355 400 400	600 700 700	1200	1110	780	630 710 710	300	460	410	12	23	250	405	355	12	25	34	32	40	28 35 35
	Y315M3-8 110KW Y355M1-8 132KW										386 424	457 560					315 355	600				508 610														28
250ZJ-I-A63	Y355-6 220KW Y355-6 250KW Y400-6 315KW	1913	454	630	392	740	414	410	200	170	525 525 545	900 900 1000	810	748	180	800	355 355 400	600 600 700	1200	1110	780	630 630 710	300	460	410	12	23	250	405	355	12	25	34	32	40	28 28 35
	Y315M2-8 90KW Y315M3-8 110KW Y355M1-8 132KW										386 386 424	457 457 560					315 315 355	600				508 508 610														28
250ZJ-I-A60	Y355M1-6 160KW Y355-6 220KW Y355-6 250KW	1913	454	630	392	740	414	410	200	170	424 525 525	560 900 900	810	748	180	800	355	600	1200	1110	780	610 630 630	300	460	410	12	23	250	405	355	12	25	34	32	40	28
	Y315M1-8 75KW Y315M2-8 90KW Y315M3-8 110KW										386	457					315	600				508														28
200ZJ-I-A75	Y355-6 250KW Y400-6 355KW	1753	374	640	323	640	374	440	125	125	525 545	900 1000	650	783	200	800	355 400	600 700	1120	1020	760	630 710	250	405	355	12	23	200	360	310	12	25	30	32	40	28 35
	Y315M3-8 110KW Y355M1-8 132KW Y355M2-8 160KW										386 424 424	457 560 560					315 355 355	600				508 610 610														28

型号 Type	电机 Motor	L	L1	L2	L3	L4	L5	L6	L7	L8	L9	L10	H1	H2	H3	H4	H5	H6	B1	B2	B3	B4	b1	c1	d1	n1	d5	b2	c2	d2	n2	d6	S1	S2	d3	d4
200ZJ-I-A73	Y355-6 250KW Y400-6 315KW Y400-6 355KW	1753	374	640	323	640	374	440	125	125	525 545 545	900 1000 1000	650	783	200	800	450	700	1120	1020	760	630 710 710	250	405	355	12	23	200	360	310	12	25	30	32	40	28 35 35
	Y315M3-8 110KW Y355M1-8 132KW Y355M2-8 160KW										386 424 424	457 560 560					355 400 400	600 700 700				508 610 610														28
200ZJ-I-A70	Y355M3-6 200KW Y400-6 280KW Y400-6 315KW	1590	368	510	355	610	318	420	157	157	424 545 545	560 1000 1000	710	730	210	800	355 400 400	600 700 700	1050	950	630	610 710 710	250	390	350	12	23	200	360	310	12	26	24	36	40	28 35 35
	Y315M2-8 90KW Y355M1-8 132KW										386 424	457 560					315 355	600				508 610														28
200ZJ-I-A68	Y355M2-6 185KW Y355-6 250KW Y400-6 280KW	1590	368	510	355	610	318	420	157	157	424 525 545	560 900 1000	710	730	210	800	355 355 400	600 600 700	1050	950	630	610 630 710	250	390	350	12	23	200	360	310	12	26	24	36	40	28 28 35
	Y315M2-8 90KW Y315M3-8 110KW Y355M1-8 132KW										386 386 424	457' 457 560					315 315 355	600				508 508 610														28
200ZJ-I-A65	Y355M2-6 185KW Y355-6 250KW	1590	368	510	355	610	318	420	157	157	424 525	560 900	660	678	160	800	355	600	1000	900	630	610 630	250	390	350	12	23	200	360	310	12	26	24	36	40	28
	Y315M1-8 75KW Y315M3-8 110KW										386	457					315	600				508														28
200ZJ-I-A63	Y355M1-6 160KW Y355-6 220KW Y355-6 250KW	1590	368	510	355	610	318	420	157	157	424 525 525	560 900 900	660	678	160	800	355	600	1000	900	630	610 630 630	250	390	350	12	23	200	360	310	12	26	24	36	40	28
	Y315M1-8 75KW Y315M3-8 110KW										386	457					315	600				508														28
200ZJ-I-A60	Y315M3-6 132KW Y355M2-6 185KW Y355M3-6 200KW	1593	355	510	371	610	305	380	157	157	386 424 424	457 560 560	660	658	160	800	315 355 355	600	1000	900	630	508 610 610	250	390	350	12	23	200	360	310	12	25	24	36	40	28
	Y315M1-8 75KW Y315M2-8 90KW										386	457					315	600				508														28
200ZJ-I-A58	Y315M3-6 132KW Y355M1-6 160KW Y355M2-6 185KW	1593	355	510	371	610	305	380	157	157	386 424 424	457 560 560	660	658	160	800	315 355 355	600	1000	900	630	508 610 610	250	390	350	12	23	200	360	310	12	25	24	36	40	28
	Y315S-8 55KW Y315M1-8 75KW										386	406 457					315	600				508														28
150ZJ-I-A65	Y315M3-6 132KW Y355M2-6 185KW Y355M3-6 200KW	1570	368	510	343	610	318	380	157	157	386 424 424	457 560 560	660	678	160	800	315 355 355	600	1000	900	630	508 610 610	200	335	295	8	23	150	300	250	8	26	26	32	40	28
	Y315M1-8 75KW Y315M2-8 90KW										386	457					315	600				508														28
150ZJ-I-A63	Y315M3-6 132KW Y355M1-6 160KW Y355M2-6 185KW	1570	368	510	343	610	318	380	157	157	386 424 424	457 560 560	660	678	160	800	315 355 355	600	1000	900	630	508 610 610	200	335	295	8	23	150	300	250	8	26	26	32	40	28
	Y315S-8 55KW Y315M1-8 75KW										386	406 457					315	600				508														28
150ZJ-I-A60	Y315M2-6 110KW Y315M3-6 132KW Y355M1-6 160KW	1571	355	510	360	610	305	370	157	157	386 386 424	457 457 560	660	658	160	800	315 315 355	600	1000	900	630	508 508 610	200	335	295	8	23	150	300	250	8	25	26	32	40	28
	Y315S-8 55KW Y315M1-8 75KW										386	406 457					315	600				508														28
150ZJ-I-A58	Y315M2-6 110KW Y315M3-6 132KW	1571	355	510	360	610	305	370	157	157	386	457	660	658	160	800	315	600	1000	900	630	508	200	335	295	8	23	150	300	250	8	25	26	32	40	28
	Y280M-8 45KW Y315S-8 55KW										330 386	419 406					280 315	600				457 508														24 28
150ZJ-I-A55	Y315M1-6 90KW Y315M2-6 110KW	1571	355	510	360	610	305	370	157	157	386	457	660	658	160	800	315	600	1000	900	630	508	200	335	295	8	23	150	300	250	8	25	26	32	40	28
	Y280S-8 37KW Y280M-8 45KW Y315S-8 55KW										330 330 386	368 419 406					280 280 315	500 500 600				457 457 508														24 24 28

(2)ZJ 共用底座　ZJ Common Base

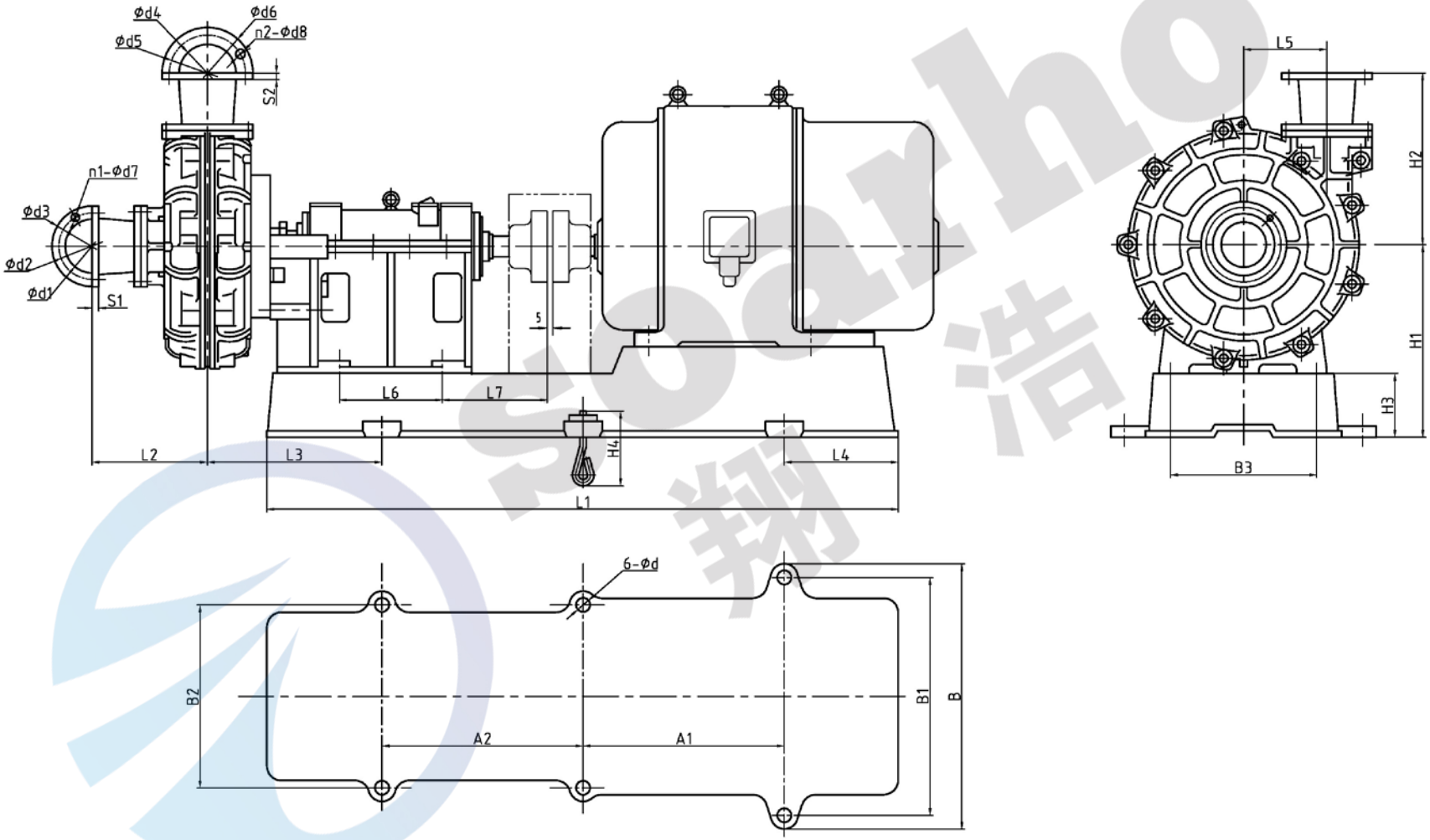

型号 Type	电机 Motor	L1	L2	L3	L4	L5	L6	L7	B	B1	B2	B3	A1	A2	H1	H2	H3	H4	d	d1	d2	d3	n1	d7	d4	d5	d6	n2	d8	S1	S2
150ZJ-I-A50	Y315S-6 75KW	1832	338	335	150	300	420	278	897	817	680	400	766	766	540	598	130	630	30	200	295	335	8	22	200	295	335	8	22	26	30
	Y280S-8 37KW	1675			110				822	742			712	712																	
150ZJ-I-A48	Y315S-6 75KW	1832	338	335	150	300	420	278	897	817	680	400	766	766	540	598	130	630	30	200	295	335	8	22	200	295	335	8	22	26	30
	Y280S-8 37KW	1675			110				822	742			712	712																	
150ZJ-I-C42	Y315M1-4 132KW	1832	338	337	150	300	420	278	897	817	680	400	766	766	540	578	130	630	30	200	295	335	8	22	200	295	335	8	22	26	30
	Y280S-6 45KW	1675			110				822	742			712	712																	
100ZJ-I-A50	Y315M2-4 160KW	1832	371	300	150	280	420	278	897	817	680	400	766	766	540	548	130	630	30	150	225	260	8	18	100	180	215	8	18	23	20
	Y280S-6 45KW	1675			110				822	742			712	712																	
100ZJ-I-A46	Y315M1-4 132KW	1832	371	300	150	280	420	278	897	817	680	400	766	766	540	548	130	630	30	150	225	260	8	18	100	180	215	8	18	23	20
	Y280S-6 45KW	1675			110				822	742			712	712																	
100ZJ-I-A42	Y280M-4 90KW	1626	295	233	135	250	400	251	760	680	680	450	700	700	490	488	130	630	30	150	225	260	8	18	100	180	215	8	18	23	20
	Y225M-6 30KW	1452		246	101								625	625																	
100ZJ-I-A39	Y280S-4 75KW	1626	295	233	135	250	400	251	760	680	680	450	700	700	490	488	130	630	30	150	225	260	8	18	100	180	215	8	18	23	20
	Y200L2-6 22KW	1385		247	103								590	590																	
100ZJ-I-A36	Y225M-4 45KW	1452	290	242	101	220	400	251	760	680	680	450	625	625	490	468	130	630	30	150	225	260	8	18	100	180	215	8	18	23	20
	Y180L-6 15KW	1355		247	102								575	575																	
100ZJ-I-A33	Y225S-4 37KW	1452	290	242	101	220	400	251	760	680	680	450	625	625	490	468	130	630	30	150	225	260	8	18	100	180	215	8	18	23	20
	Y180L-6 15KW	1355		247	102								575	575																	
80ZJ-I-A42	Y280S-4 75KW	1626	284	222	135	240	400	251	760	680	680	450	700	700	490	468	130	630	30	125	200	235	8	18	80	160	195	8	18	20	20
	Y200L2-4 22KW	1385		236	103								590	590																	
80ZJ-I-A39	Y280S-4 75KW	1626	284	222	135	240	400	251	760	680	680	450	700	700	490	468	130	630	30	125	200	235	8	18	80	160	195	8	18	20	20
	Y200L1-6 18.5KW	1385		236	103								590	590																	
80ZJ-I-A36	Y225M-4 45KW	1452	283	235	101	215	400	251	760	680	680	450	625	625	490	468	130	630	30	125	200	235	8	18	80	160	195	8	18	20	20
	Y180L-6 15KW	1355		240	102								575	575																	
80ZJ-I-A33	Y225S-4 37KW	1452	283	235	101	215	400	251	760	680	680	450	625	625	490	468	130	630	30	125	200	235	8	18	80	160	195	8	18	20	20
	Y180L-6 15KW	1355		240	102								575	575																	
65ZJ-I-A30	Y160L-4 15KW	1140	267	196	100	160	335	188	650	580	580	350	470	470	365	452	100	600	27	100	170	205	4	18	65	145	180	4	18	21	23
	Y132M1-6 4KW	1140		196	100								470	470																	
65ZJ-I-A27	Y160M-4 11KW	1140	267	196	100	160	335	188	650	580	580	350	470	470	365	452	100	600	27	100	170	205	4	18	65	145	180	4	18	21	23
	Y132S-6 3KW	1140		196	100								470	470																	
40-I-A17	Y112M-2 4W	680	95	146	30	100	208	140	260	200	200	100	310	310	230	185	60	300	14	40	100	125	4	12	40	100	125	4	12	19	19
	Y802-4 0.75KW	600		146	30								270	270																	

(3)ZJL 型安装图　Installation Drawing For Type ZJL

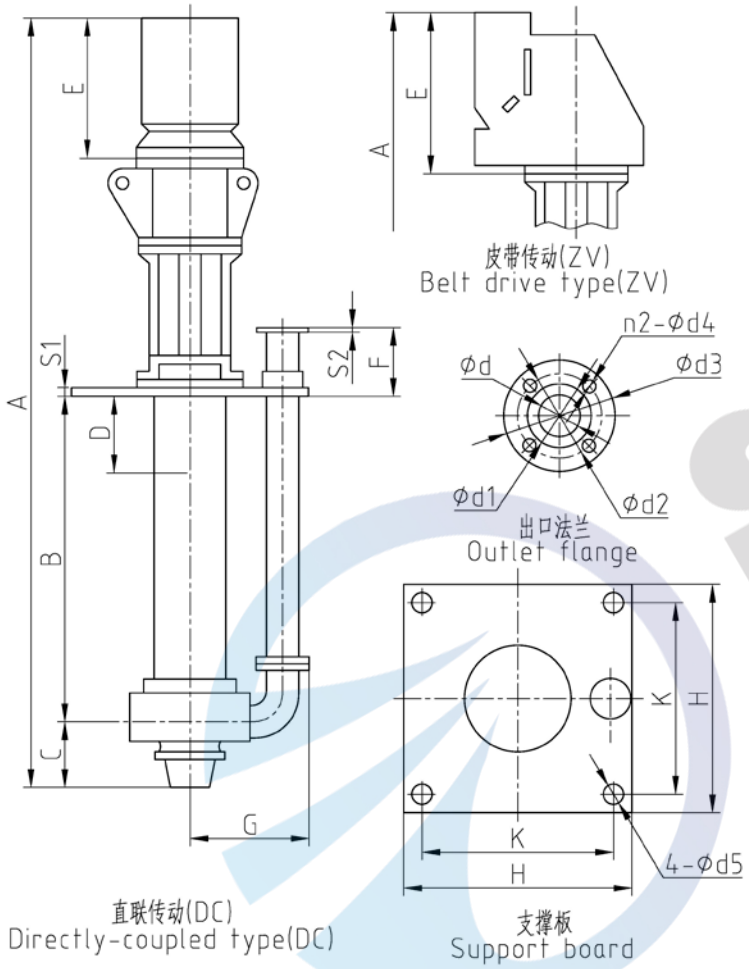

型号 Type	配用电机 Matched motor	传动方式 Driving pattern	A	B	C	D	E	F	G	泵重（含电机） Weight(motor included) kg
150ZJL-35	Y250M-6 37KW V1	DC	3090	1049	360	350	895	221	610	1300
	Y200L-6 15KW V1	DC	2905				740			1190
	Y160L-6 11KW B3	ZV	2596				699			1040
100ZJL-32	Y225M-4 45KW V1	DC	2940	1040	340	350	795	221	600	1183
	Y180L-6 15KW V1	DC	2775				660			1036
80ZJL-36	Y225M-4 45KW V1	DC	2887	1028	270	350	795	212	543	995
	Y160L-6 11KW B5	DC	2597				535			836
50ZJL-20	Y112M-4 4KW B5	DC	1941	814	195	350	340	141	321	299
	Y100L-6 1.5KW B5	DC	1921				320			282

型号 Type	支撑板 Support board				出口法兰 Outlet flange						
	H	K	d5	S1	d	d1	d2	d3	n2	d4	S2
150ZJL-35	1150	1080	25	25	150	200	225	260	8	18	22
100ZJL-32	1150	1080	25	25	100	145	170	205	8	18	20
80ZJL-36	1120	1050	25	25	80	125	150	185	4	18	18
50ZJL-20	600	540	25	25	50	90	110	140	4	14	16

注：D 尺寸为液面最高线位置。

NOTE：Size D is the upper limit of liquid level.